Key features of HM145:
- Box storage for 150 boxes
- Box storage available on left side (SX) or right side (DX)
- 2 carriages activated by a pneumatic system with suction cups to take cartons from the boxes storage, to fold and to take them away by drive belts (2 x Motors kW 0,55 each) for the bottom flaps folding & sealing with Hot Melt glue
- ROBATECH® Hot Melt glue dispenser positioned on an external carriage with casters (other brands on request)
- VENTURI® vacuum system
- Control panel equipped with: box counter - box timer, low box storage alarm, glue end alarm, full line alarm after the machine
- Safety protections with switches to disconnect electric and pneumatic circuits if opened
- Machine controlled by PLC

Key features of HM146:
- Box storage for 150 boxes
- Box storage available on left side (SX) or right side (DX)
- 2 carriages activated by a pneumatic system with suction cups to take cartons from the boxes storage, to fold and to take them away by drive belts (2 x Motors kW 0,55 each) for the bottom flaps folding & sealing with Hot Melt glue
- ROBATECH® Hot Melt glue dispenser positioned on an external carriage with casters (other brands on request)
- VENTURI® vacuum system
- Control panel equipped with: box counter - box timer, low box storage alarm, glue end alarm, full line alarm after the machine
- Safety protections with switches to disconnect electric & pneumatic circuits if opened
- Machine controlled by PLC

How to choose between a right hand and a left hand machine when using printed boxes

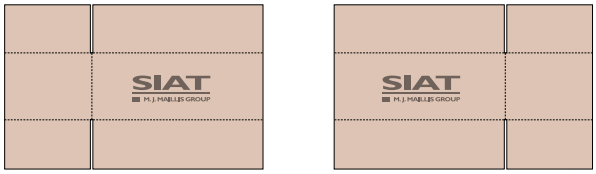

Modifications to be done on the squared boxes

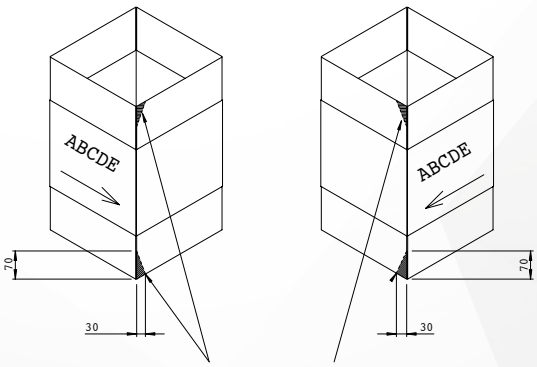

Overall machine dimensions with standard or optional extended box storage

	HM145	HM146
A	3110	3280
B1	2290	2290
B2	3290	3290
C	1002	1020
D	1317	1320
H	1790 / 1890	1790 / 1890

Standard box storage capacity: 80 ÷ 150 boxes according to thickness.

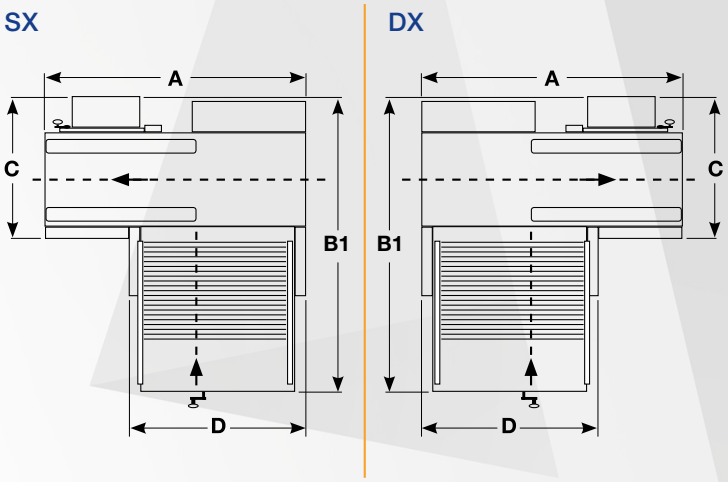

Extended box storage capacity: 160 ÷ 300 boxes according to thickness.

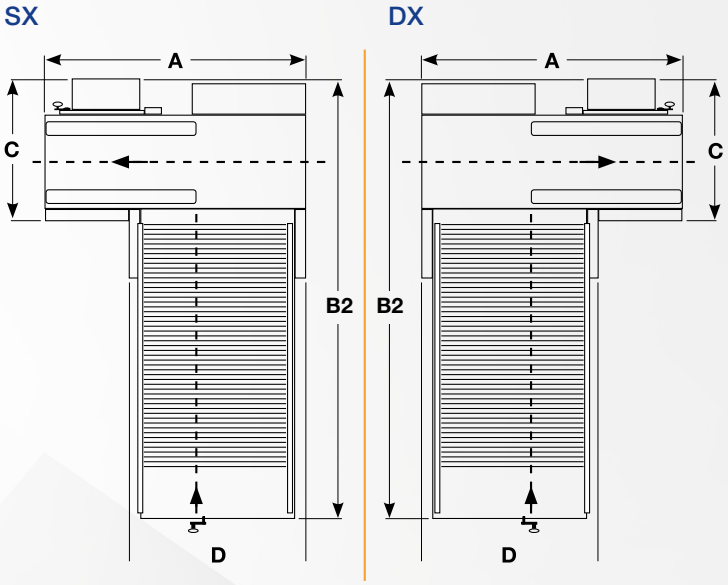

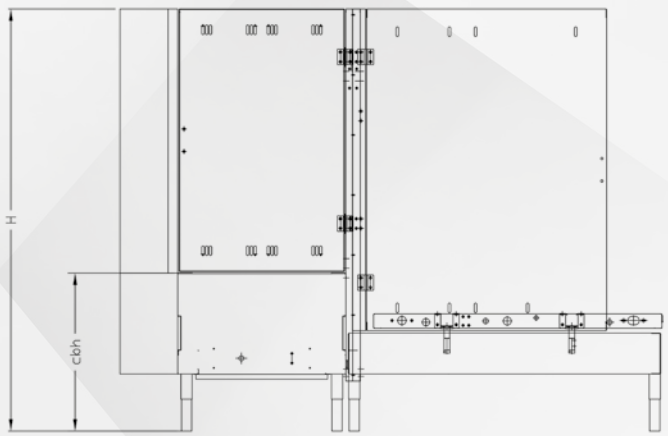

> Machine dimensions
Dimensioni macchina
Machinemessungen
Dimensions machine
Dimensiones de máquina

Size / Weigth packaging	Kg.	Kg.	LxWxH
> HM11-T	255	350	270x120x213
> HM11-TB	420	550	305x120x213
> HM145	780	1000	310x235x265
> HM146	830	1050	330x235x265

> HM11-T/TB

	Min.	Max
H	1745	2085
cbh	485	825
AS 77	585	925
AS 80	685	1025

> HM145

	Min.	Max
H	1790	1890
cbh	545	645
AS 109	665	765
AS 80	n.a.	n.a.

> HM146

	Min.	Max
H	1790	1890
cbh	545	645
AS 109	665	765
AS 80	n.a.	n.a.

> Box dimensions
Dimensioni delle scatole
Kartonabmessungen
Dimensions des boîtes
Dimensiones de cajas

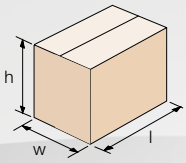

> HM11-T

	Min.	Max
l	200	600
w	150	500
h	150	500

> HM11-TB

	Min.	Max
l	200	500
w	150	500
h	150	500

> HM145

	Min.	Max
l	200	560
w	150	350
h	200	450

> HM146

	Min.	Max
l	300	600
w	200	400
h	200	450

> Production capacity
Capacità di produzione
Produktionskapazität
Capacité de production
Capacidad de producción

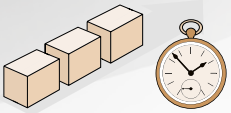

> HM11-T	Bph
Max pcs.*	1200

> HM11-TB	Bph
Max pcs.*	1000

> HM145	Bph
Max pcs.*	500

> HM146	Bph
Max pcs.*	400

* Always based on shorter manageable box

> Air consumption
Consumo aria
Luftverbrauch
Consommation d'air
Consumo de aire

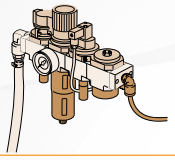

> HM11-T	NL.
Cycle	2,1

> HM11-TB	NL.
Cycle	2,2

> HM145	NL.
Cycle	12

> HM146	NL.
Cycle	12

from 5,5 bar to 7 bar

> Standard voltage
Voltaggio standard
Standardspannung
Tension standard
Voltaje estándar

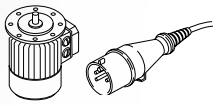

> HM11-T

380/400V - 50Hz - 3F	
440V - 60Hz - 3F	
Amps	1,33
Power kW	0,36
Phase	3Ph+PE

> HM11-TB

380/400V - 50Hz - 3F	
440V - 60Hz - 3F	
Amps	1,33
Power kW	0,36
Phase	3Ph+PE

> HM145

380/400V - 50Hz - 3F	
440V - 60Hz - 3F	
Amps	3,93
Power kW	1,11
Phase	3Ph+PE

> HM146

380/400V - 50Hz - 3F	
440V - 60Hz - 3F	
Amps	3,93
Power kW	1,11
Phase	3Ph+PE

> Robatech® Hot-Melt applicator (other brands on request)

> HM11-T

380/400V - 50Hz - 3F	
440V - 60Hz - 3F	
Amps	5,2
Power kW	2,37
Phase	3Ph+N+PE

> HM11-TB

380/400V - 50Hz - 3F	
440V - 60Hz - 3F	
Amps	6
Power kW	2,56
Phase	3Ph+N+PE

> HM145

380/400V - 50Hz - 3F	
440V - 60Hz - 3F	
Amps	4,5
Power kW	2,24
Phase	3Ph+N+PE

> HM146

380/400V - 50Hz - 3F	
440V - 60Hz - 3F	
Amps	4,5
Power kW	2,24
Phase	3Ph+N+PE

> Optionals
Accessori
Zübehor
Accessories
Accessorios

> AS80 (only for HM11)
Higher legs
Set gambe più alte
Höhere Stützen
Pieds plus hauts
Patas más altas

> AS77 (only for HM11)
Casters
Set ruote
Rädchen
Roulettes
Ruedas

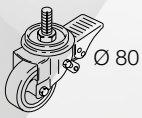

> AS109
Casters
Set ruote
Rädchen
Roulettes
Ruedas

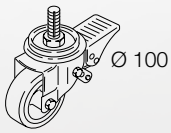

> RG
Roller conveyor
Piani a rulli
Rollenbahnen
Plans à rouleaux
Rodillos libres

> GTL - GTR
Extendable conveyor
Rulliera estensibile
Ausziehbare rollenbahnen
Convoyeur extensible
Rodillos extensibles

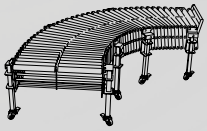

SIAT MAILLIS
www.siat.com • siat@siat.com